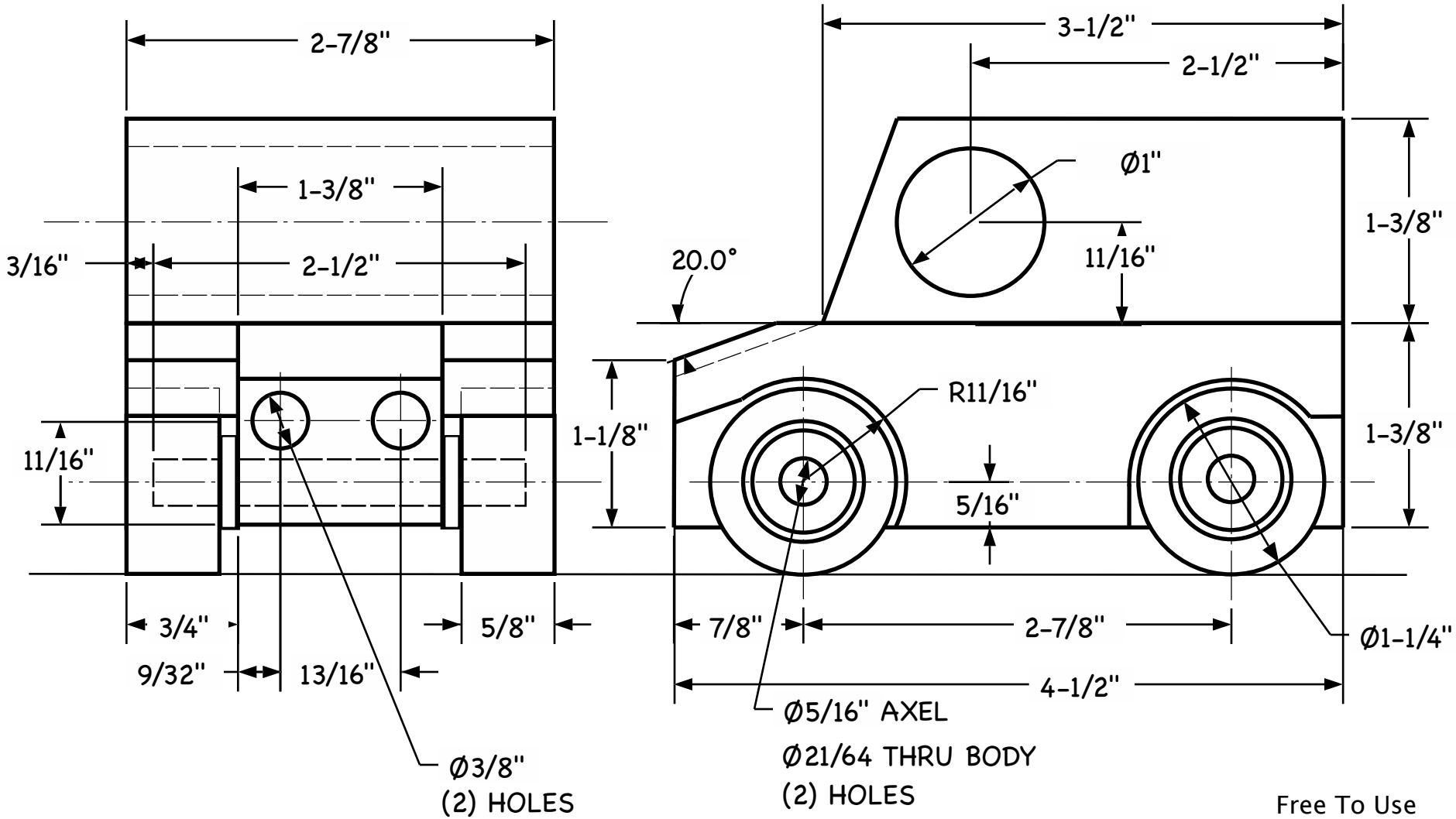

Free To Use
For Non Profit

Name: • TRUCK • Postal	
Scale: FULL	Drawn By Baldock
Similar:	Sheet 1 of 1
A	05020901

© Cincinnati Woodworking Club 2007